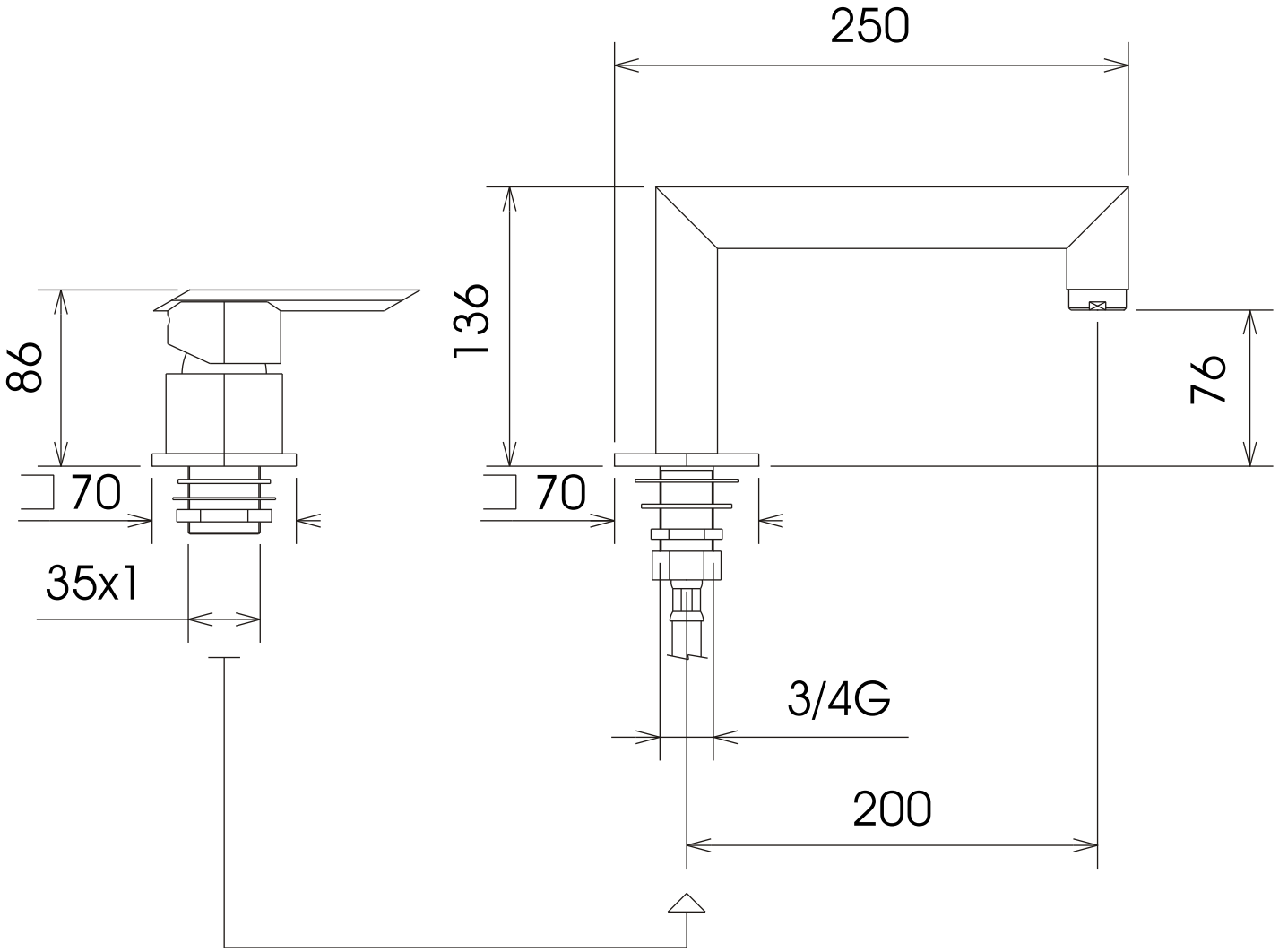
250
136
86
76
70
70
35x1
3/4G
200